NOROCK™

Self-stabilises on uneven restaurant and cafe surfaces.

Award winning design.

GOOD DESIGN AWARD® GOLD WINNER

reddot award 2017 winner

Patented technology.

Simple, robust mechanical design.

Mastering stabilising technology for over 25 years.

Instant stabilisation

NR MARKETING PTY LTD
PO BOX 1030 DUNSBOROUGH
WA AUSTRALIA 6281

NOROCK USA LLC
123 N. WACKER DR
SUITE 1600
CHICAGO IL 60606

INFO@NO-ROCK.COM
WWW.NO-ROCK.COM

All product information is correct at the time of printing but may be subject to change without notice. For the latest information please visit the NOROCK website.

Parkway 22

The NOROCK 'Parkway' table base captures an industrial rawness. Angular and architectural, the exposed componentry and minimalist design illustrate the elements – crafted, zinc-plated steel, exposed fasteners and a dichotomous simplicity. Custom colours available.

Model	Parkway
Part Number	PWST22
Material	Zinc Plated Powder Coated Steel
Base Diameter	560mm – 22”
Style	Dining height / Bar height
Height excl. Table Top	715mm – 28.1” Dining / 1080mm – 42.5” Bar
Column	75mm – 2.9”
Top Plate	Fixed
Gross Weight (GW)	7.6kg – 16.7lbs
Net Weight (NW)	6.7kg – 14.7lbs
Carton Measurement	610 x 520 x 100mm – 24 x 20 x 4”
Max Recommended Top Size	760mm – 30” Dining / 600mm – 24” Bar

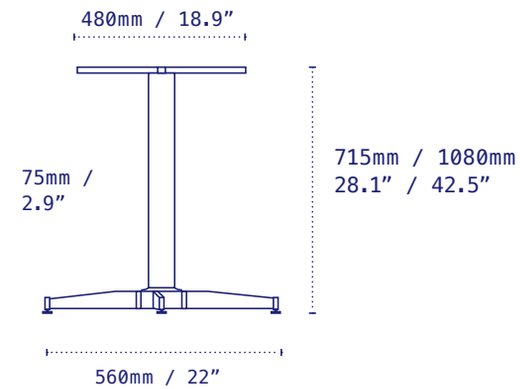

- Sandstone Black Part No: PWST22BK/B*
- Metallic Silver Part No: PWST22SI
- Rust Part No: PWST22RU
- Galvanised Part No: PWST22GA
- Antique Bronze Part No: PWST22AB

INFO@NO-ROCK.COM
WWW.NO-ROCK.COM

GOOD DESIGN AWARD® GOLD WINNER

reddot award 2017 winner

All product information is correct at the time of printing but may be subject to change without notice. For the latest information please visit the NOROCK website.

NOROCK®

*/B denotes bar height.

Parkway 27

The NOROCK ‘Parkway’ table base captures an industrial rawness. Angular and architectural, the exposed componentry and minimalist design illustrate the elements – crafted, zinc-plated steel, exposed fasteners and a dichotomous simplicity. Custom colours available.

Model	Parkway
Part Number	PWST27
Material	Zinc Plated Powder Coated Steel
Base Diameter	680mm – 27”
Style	Dining height / Bar height
Height excl. Table Top	715mm – 28.1” Dining / 1080mm – 42.5” Bar
Column	75mm – 2.9”
Top Plate	Fixed
Gross Weight (GW)	8.4kg – 18.5lbs
Net Weight (NW)	7.0kg – 15.8lbs
Carton Measurement	600 x 600 x 100mm – 23.6 x 23.6 x 4”
Max Recommended Top Size	860mm – 34” Dining / 760mm – 30” Bar

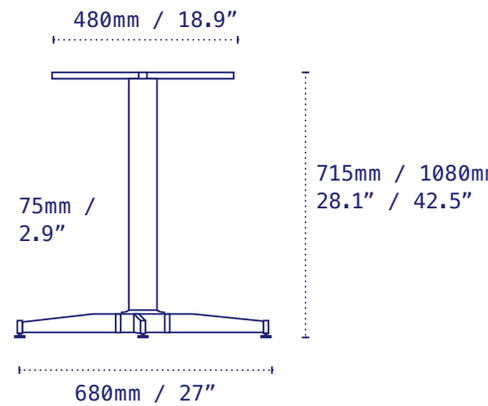

- Sandstone Black Part No: PWST27BK/B*
- Metallic Silver Part No: PWST27SI
- Rust Part No: PWST27RU
- Galvanised Part No: PWST27GA
- Antique Bronze Part No: PWST27AB

INFO@NO-ROCK.COM
WWW.NO-ROCK.COM

GOOD DESIGN AWARD® GOLD WINNER

reddot award 2017 winner

All product information is correct at the time of printing but may be subject to change without notice. For the latest information please visit the NOROCK website.

NOROCK®

*/B denotes bar height.

Parkway 30

The NOROCK ‘Parkway’ table base captures an industrial rawness. Angular and architectural, the exposed componentry and minimalist design illustrate the elements – crafted, zinc-plated steel, exposed fasteners and a dichotomous simplicity. Custom colours available.

Model	Parkway
Part Number	PWST30
Material	Zinc plated, powder coated steel
Base Diameter	760mm – 30”
Style	Dining height / Bar height
Height excl. Table Top	715mm – 28.1” Dining / 1080mm – 42.5” Bar
Column	75mm – 2.9”
Top Plate	Fixed
Gross Weight (GW)	8.9kg – 19.6lbs
Net Weight (NW)	7.0kg – 16.9lbs
Carton Measurement	670 x 600 x 100mm – 25.4 x 23.6 x 4”
Max Recommended Top Size	1000mm – 40” Dining / 860mm – 34” Bar

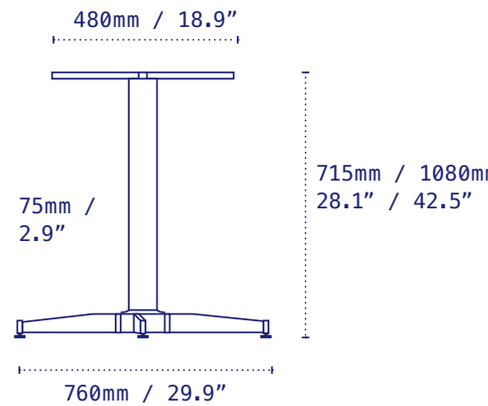

- Sandstone Black Part No: PWST30BK/B*
- Metallic Silver Part No: PWST30SI
- Rust Part No: PWST30RU
- Galvanised Part No: PWST30GA
- Antique Bronze Part No: PWST30AB

INFO@NO-ROCK.COM
WWW.NO-ROCK.COM

GOOD DESIGN AWARD® GOLD WINNER

reddot award 2017 winner

All product information is correct at the time of printing but may be subject to change without notice. For the latest information please visit the NOROCK website.

NOROCK®

*/B denotes bar height.

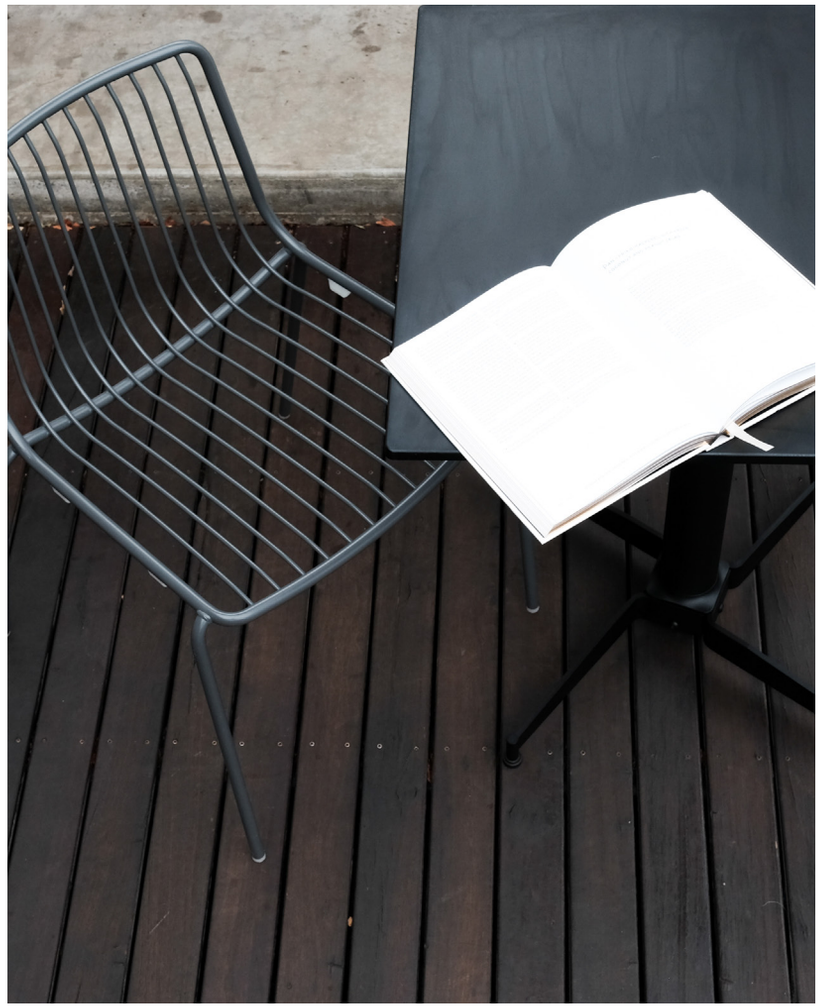

Parkway 36

The NOROCK 'Parkway' table base captures an industrial rawness. Angular and architectural, the exposed componentry and minimalist design illustrate the elements – crafted, zinc-plated steel, exposed fasteners and a dichotomous simplicity. Custom colours available.

Model	Parkway
Part Number	PWST36
Material	Zinc plated, powder coated steel
Base Diameter	915mm – 36”
Style	Dining height
Height excl. Table Top	715mm – 28.1” Dining
Column	75mm – 2.9”
Top Plate	Fixed
Gross Weight (GW)	10kg – 22.0lbs
Net Weight (NW)	8.46kg – 18.6lbs
Carton Measurement	770 x 690 x 100mm – 30.3 x 26.8 x 4”
Max Recommended Top Size	1150mm – 46” Dining

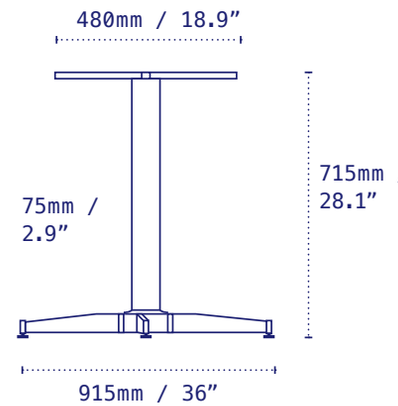

- Sandstone Black Part No: PWST36BK/B*
- Metallic Silver Part No: PWST36SI
- Rust Part No: PWST36RU
- Galvanised Part No: PWST36GA
- Antique Bronze Part No: PWST36AB

INFO@NO-ROCK.COM
WWW.NO-ROCK.COM

GOOD DESIGN AWARD® GOLD WINNER

reddot award 2017 winner

All product information is correct at the time of printing but may be subject to change without notice. For the latest information please visit the NOROCK website.

NOROCK®

*/B denotes bar height.

Parkway T-Base

The NOROCK 'Parkway' table base captures an industrial rawness. Angular and architectural, this popular base is now available in a twin. Perfect for your larger, rectangular tabletops and featuring our patented self-stabilising technology. Custom colours available.

Model	Parkway
Part Number	PTST22
Material	Zinc plated, powder coated steel
Base Diameter	915 x 560mm – 36 x 22”
Style	Dining height
Height excl. Table Top	715mm – 28.1” Dining
Column	75mm – 2.9”
Top Plate	Fixed
Gross Weight (GW)	21.4kg – 47.2lbs
Net Weight (NW)	19.5kg – 42.9lbs
Carton Measurement	930 x 730 x 110mm – 36.6 x 28.7 x 4.3”
Max Recommended Top Size	800 x 1550mm – 32 x 62”

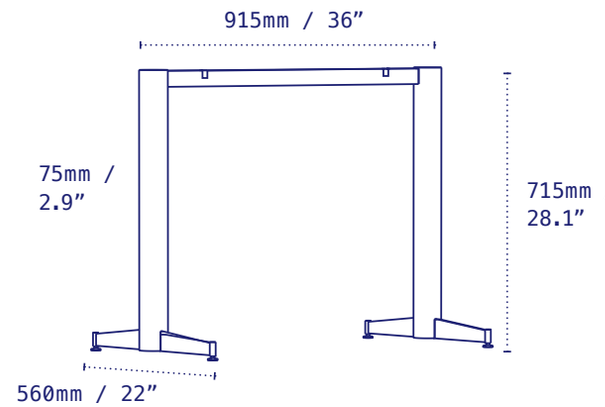

- Sandstone Black Part No: PTST22BK
- Metallic Silver Part No: PTST22SI
- Rust Part No: PTST22RU
- Galvanised Part No: PTST22GA
- Antique Bronze Part No: PTST22AB

INFO@NO-ROCK.COM
WWW.NO-ROCK.COM

GOOD DESIGN AWARD® GOLD WINNER

reddot award 2017 winner

All product information is correct at the time of printing but may be subject to change without notice. For the latest information please visit the NOROCK website.

NOROCK®

*/B denotes bar height.

Trail 22

The NOROCK ‘Trail’ table base exemplifies modern simplicity. The linear, clean design and concealed componentry complement a robust construction for use in any setting. Custom colours available.

Model	Trail
Part Number	TRST22
Material	Zinc plated, powder coated steel
Base Diameter	560mm – 22”
Style	Dining height / Bar height
Height excl. Table Top	715mm – 28.1” Dining / 1080mm – 42.5” Bar
Column	75mm – 2.9”
Top Plate	Fixed
Gross Weight (GW)	5.7kg – 12.5lbs
Net Weight (NW)	6.9kg – 15.2lbs
Carton Measurement	600 x 520 x 100mm – 23.6 x 20.5 x 4”
Max Recommended Top Size	760mm – 30” Dining / 600mm – 24” Bar

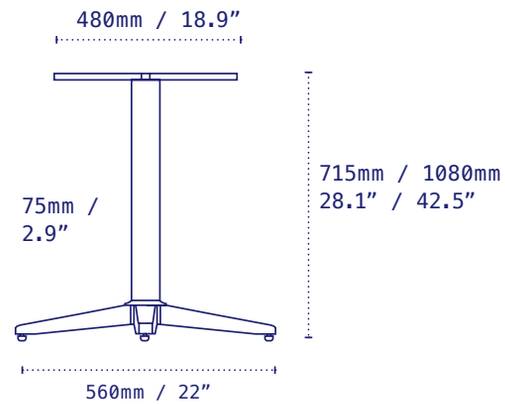

- Sandstone Black Part No: TRS22BK/B*
- Metallic Silver Part No: TRS22SI
- Rust Part No: TRS22RU
- Galvanised Part No: TRS22GA
- Antique Bronze Part No: TRS22AB

INFO@NO-ROCK.COM
WWW.NO-ROCK.COM

GOOD DESIGN AWARD® GOLD WINNER

reddot award 2017 winner

All product information is correct at the time of printing but may be subject to change without notice. For the latest information please visit the NOROCK website.

NOROCK®

*/B denotes bar height.

Trail 27

The NOROCK ‘Trail’ table base exemplifies modern simplicity. The linear, clean design and concealed componentry complement a robust construction for use in any setting. Custom colours available.

Model	Trail
Part Number	TRST27
Material	Zinc plated, powder coated steel
Base Diameter	680mm – 27”
Style	Dining height / Bar height
Height excl. Table Top	715mm – 28.1” Dining / 1080mm – 42.5” Bar
Column	75mm – 2.9”
Top Plate	Fixed
Gross Weight (GW)	7.2kg – 15.8lbs
Net Weight (NW)	6kg – 13.2lbs
Carton Measurement	600 x 600 x 100mm – 23.6 x 23.6 x 4”
Max Recommended Top Size	860mm – 34” Dining / 760mm – 30” Bar

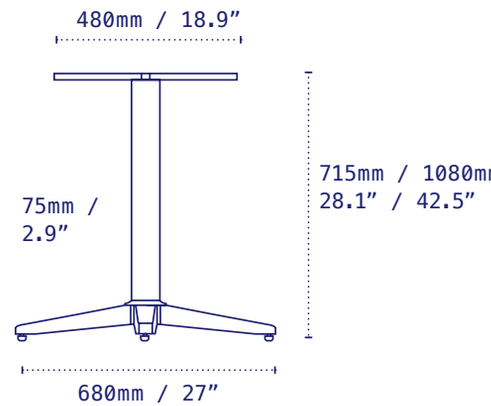

- Sandstone Black Part No: TRST27BK/B*
- Metallic Silver Part No: TRST27SI
- Rust Part No: TRST27RU
- Galvanised Part No: TRST27GA
- Antique Bronze Part No: TRST27AB

INFO@NO-ROCK.COM
WWW.NO-ROCK.COM

GOOD DESIGN AWARD® GOLD WINNER

reddot award 2017 winner

All product information is correct at the time of printing but may be subject to change without notice. For the latest information please visit the NOROCK website.

NOROCK®

*/B denotes bar height.

Trail 30

The NOROCK ‘Trail’ table base exemplifies modern simplicity. The linear, clean design and concealed componentry complement a robust construction for use in any setting. Custom colours available.

Model	Trail
Part Number	TRST30
Material	Zinc plated, powder coated steel
Base Diameter	760mm – 30”
Style	Dining height / Bar height
Height excl. Table Top	715mm – 28.1” Dining / 1080mm – 42.5” Bar
Column	75mm – 2.9”
Top Plate	Fixed
Gross Weight (GW)	6.2kg – 13.6lbs
Net Weight (NW)	7.4kg – 16.3lbs
Carton Measurement	670 x 600 x 100mm – 25.4 x 23.6 x 4”
Max Recommended Top Size	1000mm – 40” Dining / 860mm – 34” Bar

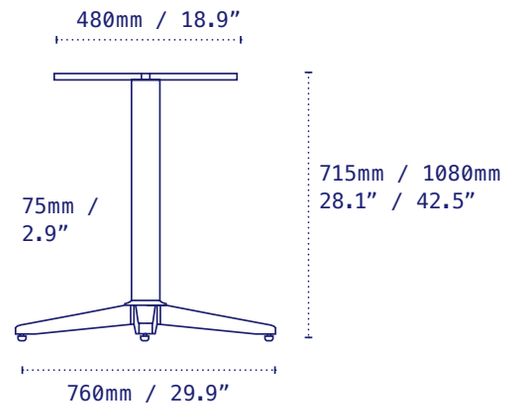

- Sandstone Black Part No: TRS30BK/B*
- Metallic Silver Part No: TRS30SI
- Rust Part No: TRS30RU
- Galvanised Part No: TRS30GA
- Antique Bronze Part No: TRS30AB

INFO@NO-ROCK.COM
WWW.NO-ROCK.COM

GOOD DESIGN AWARD® GOLD WINNER

reddot award 2017 winner

All product information is correct at the time of printing but may be subject to change without notice. For the latest information please visit the NOROCK website.

NOROCK®

*/B denotes bar height.

Trail T-Base

This twin base offers the NOROCK patented self-stabilising function for your larger, rectangular tabletops. Perfectly matched with all Trail bases and complementing other NOROCK designs, the T-Base is ADA compliant.

Model	Trail T-Base
Part Number	TTST22
Material	Powder coated steel
Base Diameter	915mm x 500mm – 36” x 22”
Style	Dining height
Height excl. Table Top	715mm – 28.1” Dining
Column	75mm – 2.9”
Top Plate	Fixed
Gross Weight (GW)	16.5kg – 36.3lbs
Net Weight (NW)	13.6kg – 29.9lbs
Carton Measurement	750 x 960 x 100mm – 29.5 x 37.7 x 3.9”
Max Recommended Top Size	800 x 1550mm – 32 x 62”

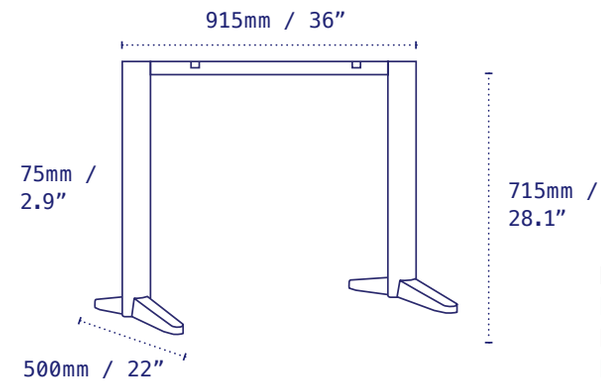

- Sandstone Black Part No: TTS22BK
- Metallic Silver Part No: TTS22SI
- Rust Part No: TTS22RU
- Galvanised Part No: TTS22GA
- Antique Bronze Part No: TTS22AB

INFO@NO-ROCK.COM
WWW.NO-ROCK.COM

GOOD DESIGN AWARD® GOLD WINNER

reddot award 2017 winner

All product information is correct at the time of printing but may be subject to change without notice. For the latest information please visit the NOROCK website.

NOROCK®

Avenue

The NOROCK 'Avenue' table base balances classic, architectural linework with a contemporary pragmatism. Exhibiting sensory weightlessness, the high quality, die-cast aluminium base sees the 'Avenue' as a perfect accompaniment for any setting. Custom colours available.

Model	Avenue
Part Number	AVAL27
Material	Powder Coated Aluminium
Base Diameter	680mm – 27”
Style	Dining height / Bar height
Height excl. Table Top	715mm – 28.1” Dining / 1080mm – 42.5” Bar
Column	75mm – 2.9”
Top Plate	Fixed
Gross Weight (GW)	6.2kg – 11.0lbs
Net Weight (NW)	5kg – 13.6lbs
Carton Measurement	600 x 600 x 100mm – 23.6 x 23.6 x 4”
Max Recommended Top Size	860mm – 34” Dining / 760mm – 30” Bar

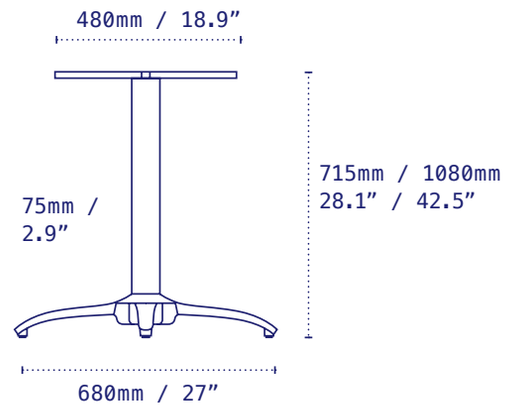

- Sandstone Black Part No: AVAL27BK/B*
- Metallic Silver Part No: AVAL27SI
- Aluminium Part No: AVAL27Al
- White Part No: AVAL27WH
- Antique Bronze Part No: AVAL27AB
- Rust Part No: AVAL27RU

INFO@NO-ROCK.COM
WWW.NO-ROCK.COM

GOOD DESIGN AWARD® GOLD WINNER

reddot award 2017 winner

All product information is correct at the time of printing but may be subject to change without notice. For the latest information please visit the NOROCK website.

NOROCK®

*/B denotes bar height.

Esplanade

Classic and architectural, the NoRock 'Esplanade' table base exemplifies a prestige. Elegant, established and confident, the 'Esplanade' is suited to the sophisticated dining experience. Custom colours available.

Model	Esplanade
Part Number	ESAL27
Material	Aluminium
Base Diameter	680mm – 27”
Style	Dining height / Bar height
Height excl. Table Top	715mm – 28.1” Dining / 1080mm – 42.5” Bar
Column	75mm – 2.9”
Top Plate	Fixed
Gross Weight (GW)	5.9kg – 13.0lbs
Net Weight (NW)	4.7kg – 10.3lbs
Carton Measurement	600 x 600 x 100mm – 23.6 x 23.6 x 4”
Max Recommended Top Size	860mm – 34” Dining / 760mm – 30” Bar

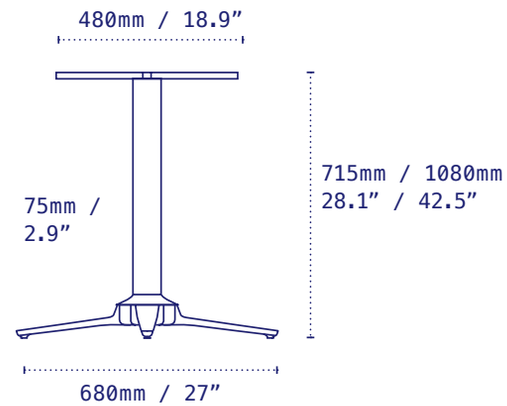

- Sandstone Black Part No: ESAL27BK/B*
- Metallic Silver Part No: ESAL27SI
- Aluminium Part No: ESAL27Al
- White Part No: ESAL27WH
- Antique Bronze Part No: ESAL27AB
- Rust Part No: ESAL27RU

INFO@NO-ROCK.COM
WWW.NO-ROCK.COM

GOOD DESIGN AWARD® GOLD WINNER

reddot award 2017 winner

All product information is correct at the time of printing but may be subject to change without notice. For the latest information please visit the NOROCK website.

NOROCK®

*/B denotes bar height.

Terrace

Interweaving features from the ‘Avenue’ and ‘Esplanade’, the NOROCK ‘Terrace’ table base is designed for limited storage capacities. Functional and award-winning, the ‘Terrace’ hallmark is its iconic nesting feature. Simply fold, then nest. Custom colours available.

Model	Terrace
Part Number	TCAL27
Material	Aluminium
Base Diameter	680mm – 27”
Style	Dining height / Bar height
Height excl. Table Top	715mm – 28.1” Dining / 1080mm – 42.5” Bar
Column	75mm – 2.9”
Top Plate	Fixed
Gross Weight (GW)	6.6kg – 14.5lbs
Net Weight (NW)	5.4kg – 11.9lbs
Carton Measurement	600 x 600 x 100mm – 23.6 x 23.6 x 4”
Max Recommended Top Size	860mm – 34” Dining / 760mm – 30” Bar

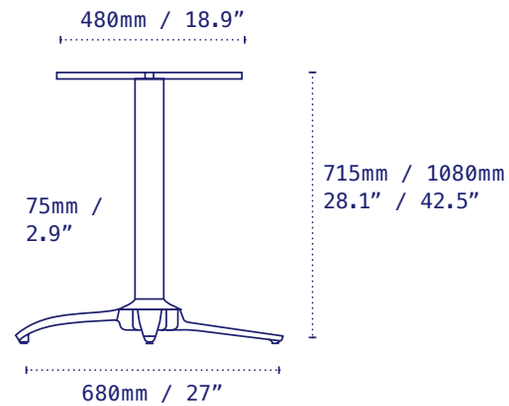

- Sandstone Black Part No: TCAL27BK/B*
- Metallic Silver Part No: TCAL27SI
- Aluminium Part No: TCAL27Al
- White Part No: TCAL27WH
- Antique Bronze Part No: TCAL27AB
- Rust Part No: TCAL27RU

INFO@NO-ROCK.COM
WWW.NO-ROCK.COM

GOOD DESIGN AWARD® GOLD WINNER

reddot award 2017 winner

All product information is correct at the time of printing but may be subject to change without notice. For the latest information please visit the NOROCK website.

NOROCK®

*/B denotes bar height.

Lunar

The Lunar presents all the self-stabilising technology within a well-designed, unique disc-shaped base. Custom colours available

Model	Lunar
Part Number	LNST21
Material	Powder coated steel
Base Diameter	530mm – 21”
Style	Dining height / Bar height
Height excl. Table Top	715mm – 28.1” Dining / 1080mm – 42.5” Bar
Column	75mm – 2.9”
Top Plate	Fixed
Gross Weight (GW)	16.4kg – 36.1lbs
Net Weight (NW)	14.5kg – 31.9lbs
Carton Measurement	550 x 550 x 150mm – 21.6 x 21.6 x 5.9”
Max Recommended Top Size	760mm – 30” Dining / 600mm – 24” Bar

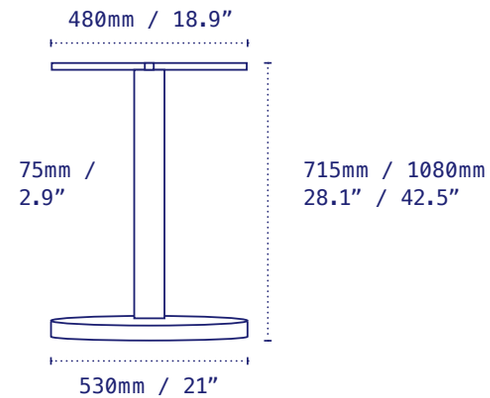

- Sandstone Black Part No: LNST21BK/B*
- Metallic Silver Part No: LNST21SI
- Aluminium Part No: LNST21Al
- White Part No: LNST21WH
- Antique Bronze Part No: LNST21AB
- Rust Part No: LNST21RU

INFO@NO-ROCK.COM
WWW.NO-ROCK.COM

GOOD DESIGN AWARD® GOLD WINNER

reddot award 2017 winner

All product information is correct at the time of printing but may be subject to change without notice. For the latest information please visit the NOROCK website.

NOROCK®

*/B denotes bar height.